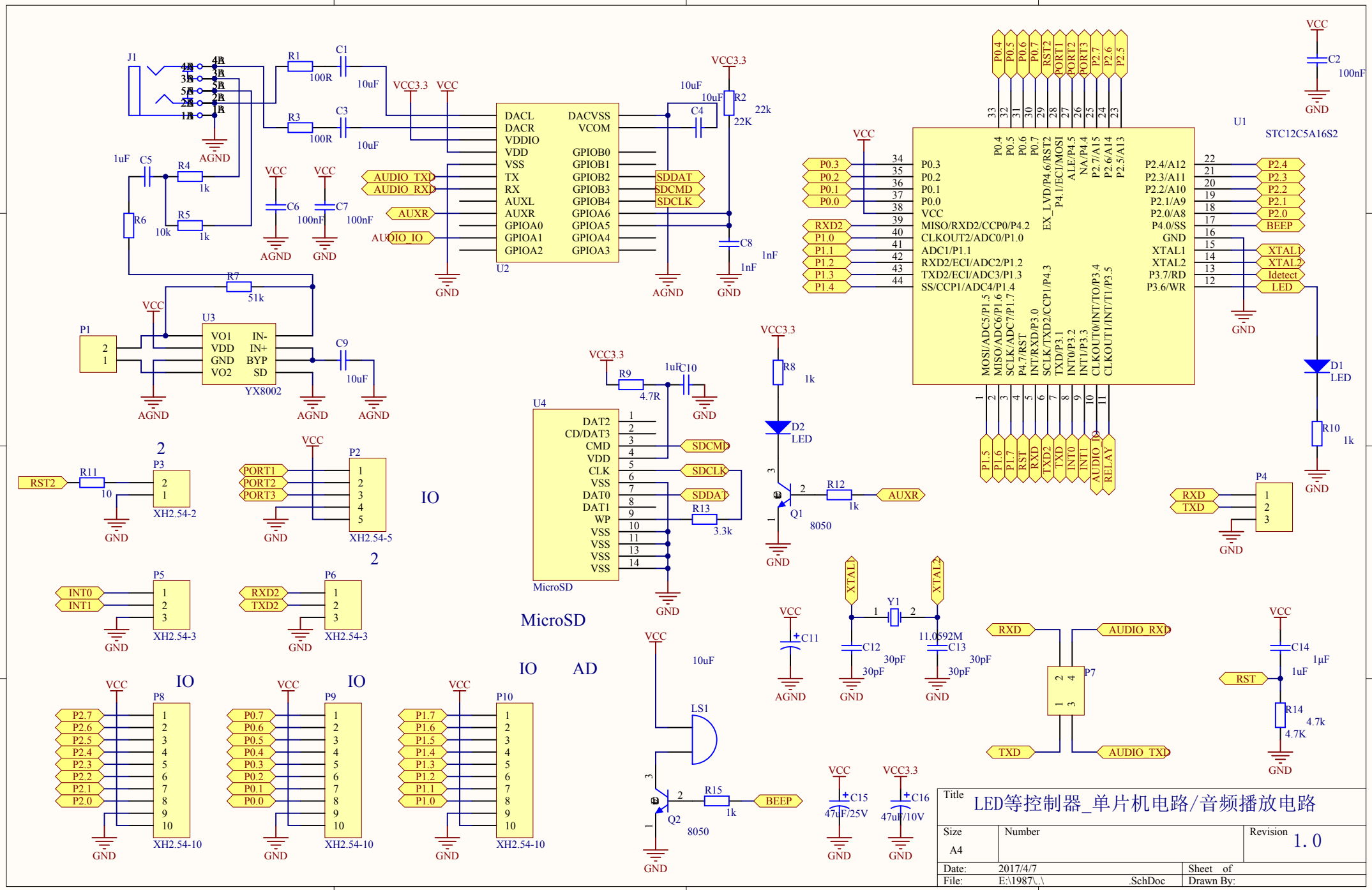
J1
R1 100R
C1 10uF
R3 100R
C3 10uF
VCC3.3
VCC
AGND
1uF C5
R4 1k
R5 1k
R6 10k
C6 100nF
C7 100nF
GND
AUDIO_TXD
AUDIO_RXD
AUXR
AUDIO_IO
DACL
DACR
VDDIO
VDD
VSS
TX
RX
AUXL
AUXR
GPIOA0
GPIOA1
GPIOA2
DACVSS
VCOM
GPIOB0
GPIOB1
GPIOB2
GPIOB3
GPIOB4
GPIOA6
GPIOA5
GPIOA4
GPIOA3
U2
SDDAT
SDCMD
SDCLK
10uF
C4
R2 22k
C8 1nF
R7 51k
P1
U3
VO1
VDD
GND
VO2
IN-
IN+
BYP
SD
YX8002
C9 10uF
U1
STC12C5A16S2
C2 100nF
P0.3
P0.2
P0.1
P0.0
RXD2
P1.0
P1.1
P1.2
P1.3
P1.4
P2.4
P2.3
P2.2
P2.1
P2.0
BEEP
XTAL1
XTAL2
Idetect
LED
D1 LED
R10 1k
P1.5
P1.6
P1.7
RST
RXD
TXD2
TXD
INT0
INT1
AUDIO_IO
RELAY
U4
DAT2
CD/DAT3
CMD
CLK
DAT0
DAT1
WP
MicroSD
R9 4.7R
C10 1uF
R8 1k
D2 LED
Q1 8050
R12 1k
R13 3.3k
RST2
R11 10
P3
XH2.54-2
P2
PORT1
PORT2
PORT3
XH2.54-5
IO
2
P4
RXD
TXD
P5
INT0
INT1
XH2.54-3
P6
RXD2
TXD2
MicroSD
IO
AD
P8
P2.7
P2.6
P2.5
P2.4
P2.3
P2.2
P2.1
P2.0
XH2.54-10
P9
P0.7
P0.6
P0.5
P0.4
P0.3
P0.2
P0.1
P0.0
P10
P1.7
P1.6
P1.5
P1.4
P1.3
P1.2
P1.1
P1.0
LS1
Q2 8050
R15 1k
C15 47uF/25V
C16 47uF/10V
C11
Y1 11.0592M
C12 30pF
C13 30pF
P7
C14 1uF
R14 4.7k
Title
LED等控制器_单片机电路/音频播放电路
Size
A4
Number
Revision
1.0
Date: 2017/4/7
Sheet of
File: E:\1987\..\ .SchDoc
Drawn By:

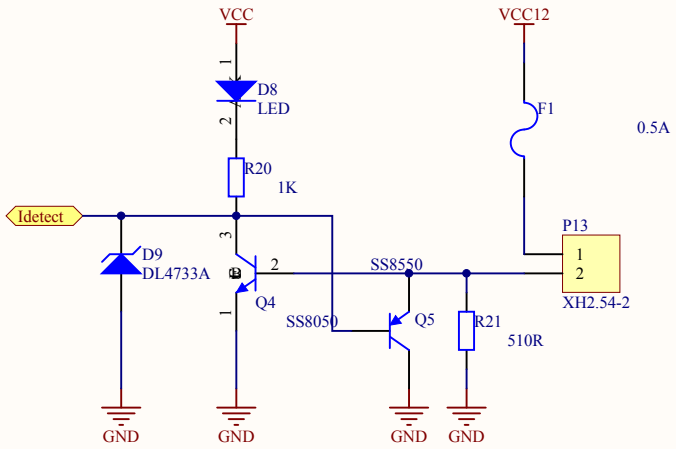

Title		
Size A4	Number	Revision V1.2
Date: 2017/4/7		Sheet of
File: E:\1987\..\ .SchDoc		Drawn By:

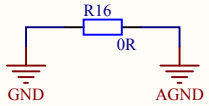

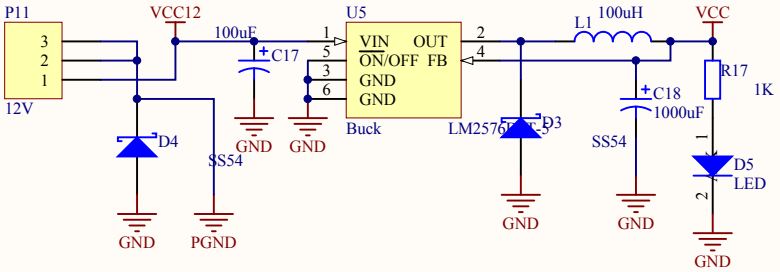

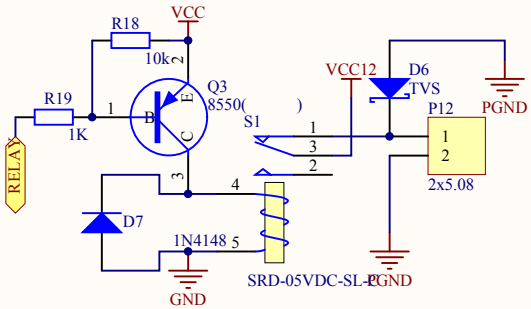

Title		
12V-5V Buck		
Size A4	Number	Revision V1.0
Date: 2017/4/7		Sheet of
File: E:\1987\..\ .SchDoc		Drawn By: 付强

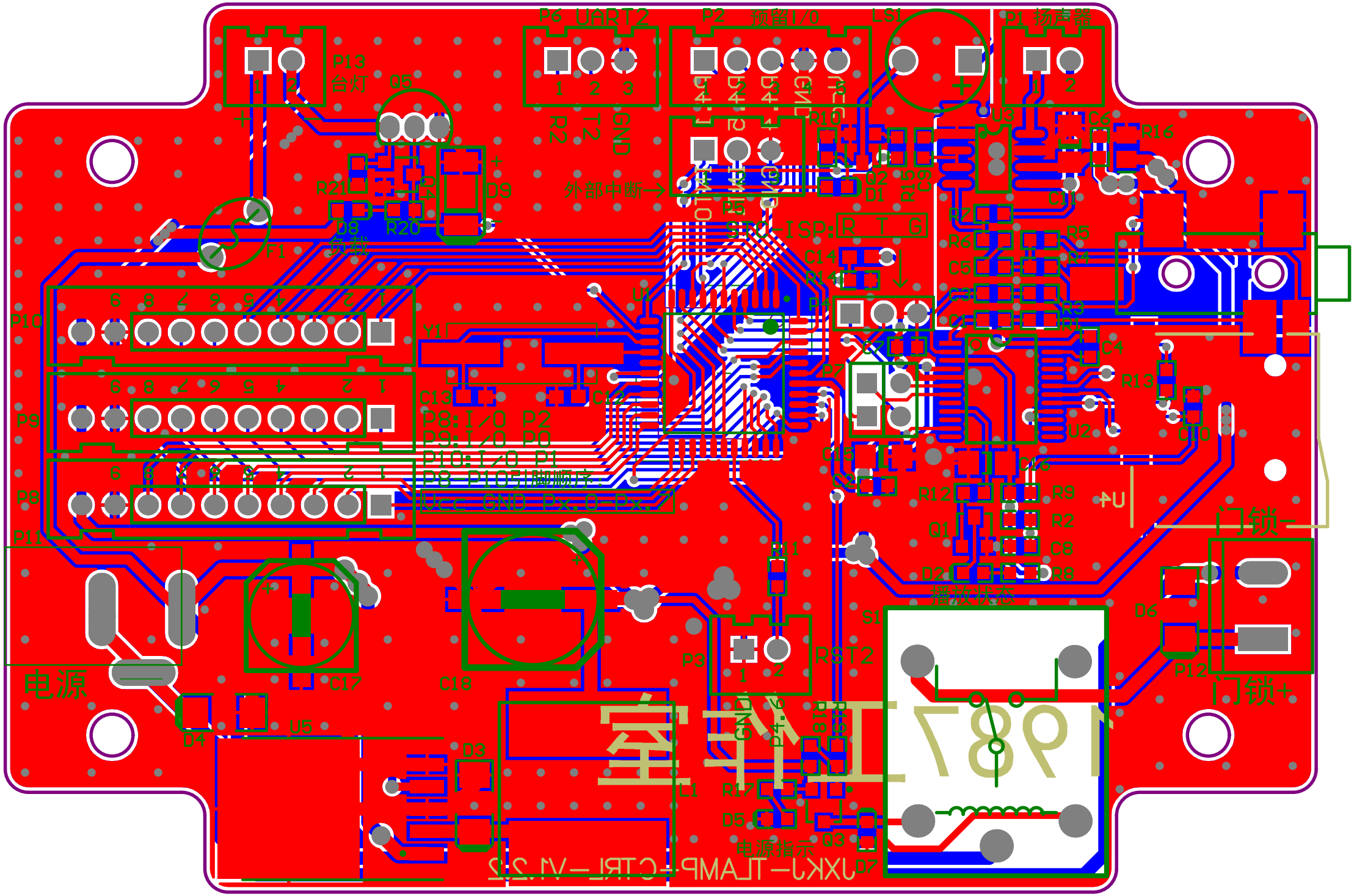
P6 UART2
P2 预留I/O
LS1
P1 扬声器
P13
台灯
Q5
R2 T2 GND
外部中断→
ISP:R T G
P10
P9
P8
P11
P8:I/O P2
P9:I/O P0
P10:I/O P1
P8 P10引脚顺序
Vcc GND Px.0 Px.1
电源
C17
C18
U5
D4
D3
L1
R17
D5
Q3
D7
电源指示
P3
RST2
S1
播放状态
D6
P12
门锁-
门锁+
U4
U2
U3
U1
Y1
F1
D8
R20
R21
D9
R10
D1
Q2
R18
R19
C14
R14
P4
D2
Q1
R12
R9
R2
C8
R8
R13
C4
C6
R16
C10
R5
R4
R6
R7
C5
C13
C15
C16
C11
D7
UXKJ-TLAMP-CTRL-V1.2.2